# ENGR 14 - STATICS X  TUE 02/09/16

## 3D EQUILIBRIUM WEEK

## 5.5 FREE BODY DIAGRAM (CHAPTERS 5.5-5.7)

### SUPPORTS

remember:

- translation constrained ⇝ force
- rotation constrained ⇝ moment

example:

ball-and-socket joint

- cannot translate ⇝ $F_x, F_y, F_z$
- can rotate ⇝ $M_x = M_y = M_z = 0$

memorize: TABLE 5.2!

### EXAMPLE 5.14

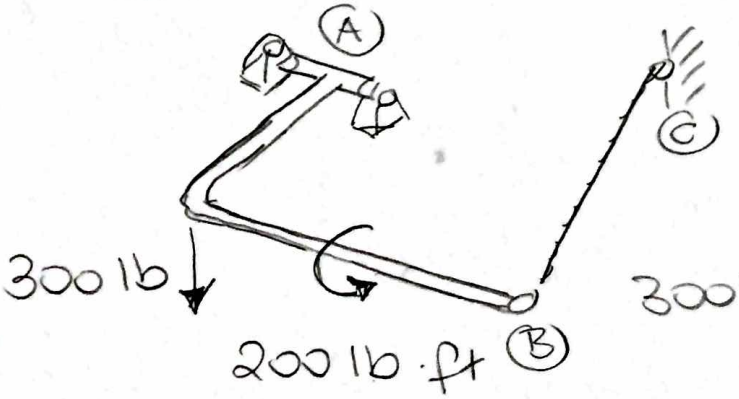


FREE BODY DIAGRAM

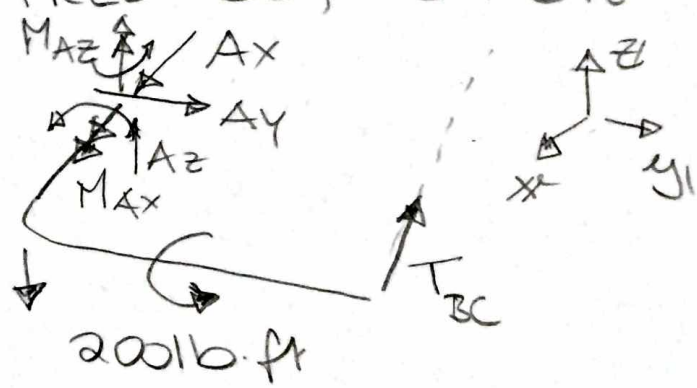


- Six equations: $\sum F \overset{!}{=} 0$ ; $\sum M \overset{!}{=} 0$
- Six unknowns: $A_x, M_{Ax}, A_y, A_z, M_{Az}, T_{BC}$

▷ we can solve this!

## 5.6 EQUILIBRIUM

$$\sum F = 0: \quad \sum F_x = 0;\ \sum F_y = 0;\ \sum F_z = 0$$
$$\sum M = 0: \quad \sum M_x = 0;\ \sum M_y = 0;\ \sum M_z = 0$$

six equations!

## 5.7 CONSTRAINTS & STATICAL DETERMINANCY

3D 6 EQUATIONS $\rightleftharpoons$ 6 UNKNOWNS

Problem I: Redundant Constraints

2D

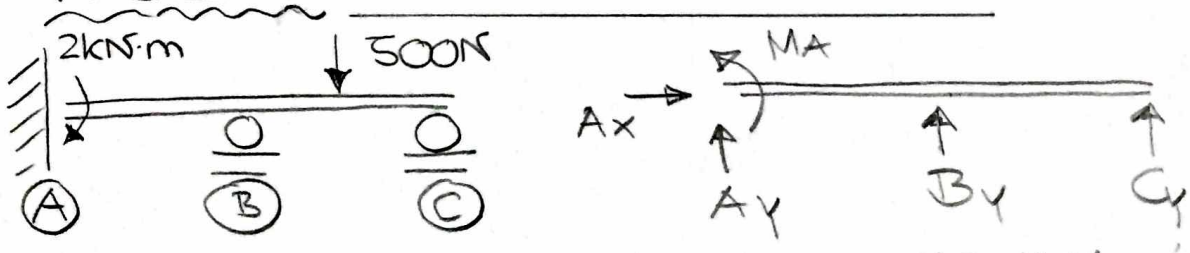


3 EQUATIONS $\rightleftharpoons$ 5 UNKNOWNS

$\sum F_x = 0;\ \sum F_y = 0;\ \sum M = 0$ $\quad A_x, A_y, M_A, B_y, C_y$

"redundant constraints"

system is "statically indeterminate"

= more unknowns than equations, we cannot solve this here in ENGR14

$\Rightarrow$ ME80 STRENGTH OF MATERIALS

material-dependent solution, i.e., different for different materials, e.g., wood, glass, metal, ...

$\Rightarrow$ system is stable, but "over-constrained"

## Problem II: Improper Constraints

2D

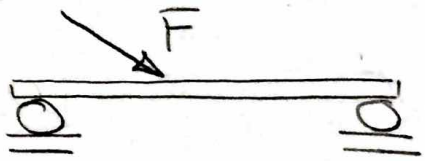


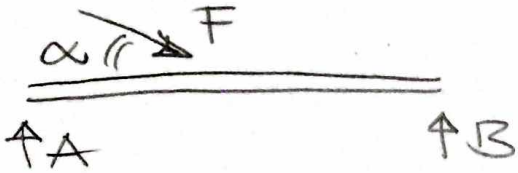


3 EQUATIONS $\neq$ 2 UNKNOWNS

$\sum F_x \overset{!}{=} 0 \quad F \cdot \cos\alpha = 0$ ... supports A & B cannot carry the load!

$\Rightarrow$ system is moving / improperly constrained

2D

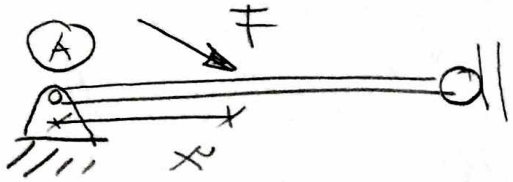


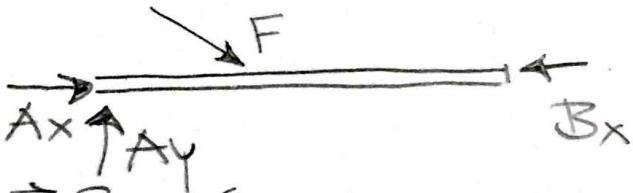


3 EQUATIONS $\neq$ 3 unknowns

BUT: $\circlearrowleft_+ \sum M_A \overset{!}{=} 0 \rightsquigarrow -F \cdot \sin\alpha \cdot x = 0$

... supports cannot carry the moment!

$\Rightarrow$ system is moving / improperly constrained

If all reaction forces intersect @ one point (2d) or one axis (3d), or are parallel

$\Rightarrow$ system is unstable ↯ AVOID! ↯

# EXAMPLE - PROBLEM 5.15

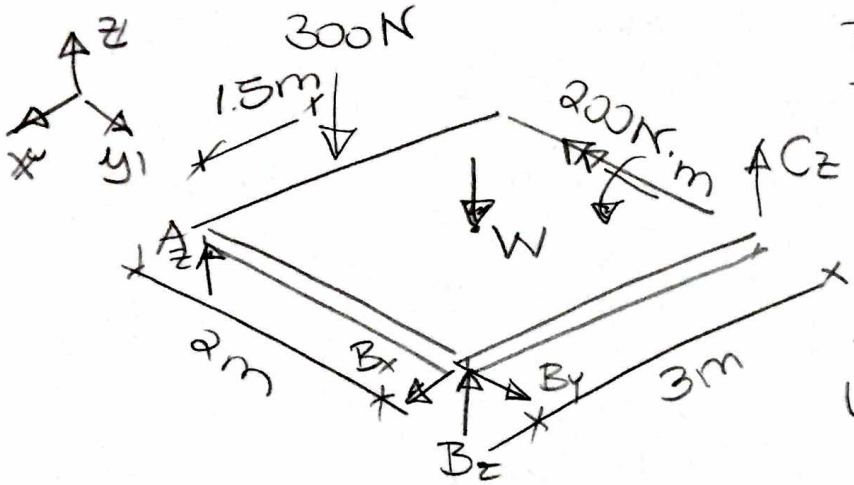


## FREE BODY DIAGRAM

$W = 100kg \cdot 9.81 \frac{N}{kg} = 981N$

## REACTIONS/EQUILIBRIUM

where do we start?
make smart assumptions!

$\swarrow \sum F_x \overset{!}{=} 0 \rightsquigarrow \boxed{B_x = 0N}$

$\searrow \sum F_y \overset{!}{=} 0 \rightsquigarrow \boxed{B_y = 0N}$

$\uparrow \sum F_z \overset{!}{=} 0 \rightsquigarrow A_z + B_z + C_z - W - 300N = 0$

now what??? moment about which axis? and where???

$\circlearrowleft \sum M_{B-C} \overset{!}{=} 0 \rightsquigarrow +W \cdot 1m + 300N \cdot 2m - A_z \cdot 2m \overset{!}{=} 0$

$A_z = [981N \cdot 1m + 300N \cdot 2m] / 2m$

$\boxed{A_z = 790N}$

$\circlearrowright \sum M_{A-B} \overset{!}{=} 0 \rightsquigarrow C_z \cdot 3m - W \cdot 1.5m - 300N \cdot 1.5m - 200Nm$

don't forget!!!

$C_z = [981N \cdot 1.5m + 300N \cdot 1.5m + 200Nm] / 3m$

$\boxed{C_z = 707N}$

$\circlearrowleft \sum M_{A-O} \overset{!}{=} 0 \rightsquigarrow B_z \cdot 2m - W \cdot 1m + C_z \cdot 2m = 0$

$B_z = [981N \cdot 1m - 707N \cdot 2m] / 2m$

$\boxed{B_z = -271N}$

CONTROL $A_z + B_z + C_z - W - 300N \overset{!}{=} 0$

$\uparrow \sum F_z \overset{!}{=} 0 \rightsquigarrow 790N + (-271N) + 707N - 981N - 300N = 0N$ ✓

6 EQUATIONS ⇒ 5 UNKNOWNS → MOVES around IN XY-PLANE