e14 - applied mechanics: statics

mon/wed/fri, 12:50-2:05pm, 370-370

e14 - applied mechanics: statics

	w06		**3d equilibrium week**	**ch 5**
mon	may	02	what's a free body diagram of a 3d system?	5.5
wed	may	04	what force and moment equilibrium in 3d?	5.6-5.7
fri	may	06	problem session 4	
	w07		**structures week**	**ch 6**
mon	may	09	what's truss structure?	6.1-6.3
wed	may	11	what's a frame?	6.6
fri	may	13	problem session 5	
	w08		**internal force week**	**ch 7**
mon	may	16	what's inside?	7.1
wed	may	18	midterm 2, in class, closed book, 1 cheat sheet	cubberley
fri	may	20	what's a shear and moment diagram?	7.2-7.3
	w09		**friction and center week**	**ch 8-9**
mon	may	23	what's friction?	8.1-8.2
wed	may	25	what's the center?	9.1-9.2
fri	may	27	problem session 6	
	w10		**that's it week**	
mon	may	30	~~memorial day / no class~~	
wed	jun	01	what's a was this all about?	
fri	jun	03	~~end of quarter / no class~~	
mon	jun	06	final, in class, closed book, 1 cheat sheet	

syllabus

e14 - applied mechanics: statics

- **regular final**
  mon, 06/06/11, 8:30-10:30am, 120 min, cubaud
- regular final (w/extra time and extra room)
  mon, 06/05/11, 8:30-11:30pm, durand 203, 180 min
- **makeup final**
  sun, 05/05/11, 3:00-5:00pm, 530-127, 120 min
- makeup final (w/extra time)
  sun, 05/05/11, 3:00-6:00pm, 530-127, 180 min
- closed book, closed notes, one page **cheat sheet**
- bring your **calculators!**
- **last minute office hours**
  sun, 05/05/11, 3:00-6:00, @ (but not in) 530-127

final exam - time & place

e14 - applied mechanics: statics

ENGR14 - Applied Mechanics - Statics Final Exam - Spring 2011

ENGR14 - Applied Mechanics - Statics
June 06, 2011

Instructions

A. This is an closed note / closed book exam.
B. You are allowed to bring a one page hand written cheat sheet and a calculator.
C. Always start with a Free Body Diagram. Demonstrate the derivation of your results.
D. Each of the six problems is worth 20 points.
E. Only five out of six problems will be graded for 100 points total.
F. You have to identify five out of six problems, which you would like to be graded.
G. You have 120 minutes to complete the exam.

final exam - format

problem 01

- to develop equations of equilibrium for a rigid body
- to introduce the concept of a free body diagram for a rigid body
- to show how to solve rigid body equilibrium problems

example 5.15

The homogeneous plate shown in Fig. 5–28*a* has a mass of 100 kg and is subjected to a force and couple moment along its edges. If it is supported in the horizontal plane by a roller at *A*, a ball-and-socket joint at *B*, and a cord at *C*, determine the components of reaction at these supports.

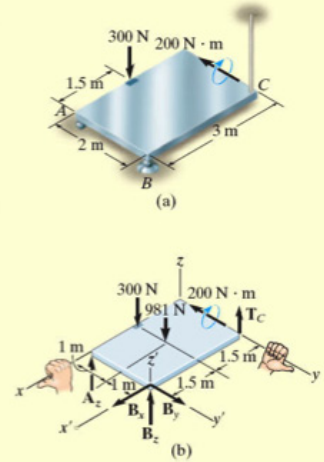

Fig. 5–28

SOLUTION (SCALAR ANALYSIS)

Free-Body Diagram. There are five unknown reactions acting on the plate, as shown in Fig. 5–28*b*. Each of these reactions is assumed to act in a positive coordinate direction.

Equations of Equilibrium. Since the three-dimensional geometry is rather simple, a *scalar analysis* provides a *direct solution* to this problem. A force summation along each axis yields

$\Sigma F_x = 0; \qquad B_x = 0$ *Ans.*

$\Sigma F_y = 0; \qquad B_y = 0$ *Ans.*

$\Sigma F_z = 0; \qquad A_z + B_z + T_C - 300\text{ N} - 981\text{ N} = 0 \qquad (1)$

Recall that the moment of a force about an axis is equal to the product of the force magnitude and the perpendicular distance (moment arm) from the line of action of the force to the axis. Also, forces that are parallel to an axis or pass through it create no moment about the axis. Hence, summing moments about the positive *x* and *y* axes, we have

example 5.15

$\Sigma M_x = 0; \qquad T_C(2\text{ m}) - 981\text{ N}(1\text{ m}) + B_z(2\text{ m}) = 0 \qquad (2)$

$\Sigma M_y = 0;$

$300\text{ N}(1.5\text{ m}) + 981\text{ N}(1.5\text{ m}) - B_z(3\text{ m}) - A_z(3\text{ m}) - 200\text{ N}\cdot\text{m} = 0 \qquad (3)$

The components of the force at *B* can be eliminated if moments are summed about the *x′* and *y′* axes. We obtain

$\Sigma M_{x'} = 0; \qquad 981\text{ N}(1\text{ m}) + 300\text{ N}(2\text{ m}) - A_z(2\text{ m}) = 0 \qquad (4)$

$\Sigma M_{y'} = 0;$

$-300\text{ N}(1.5\text{ m}) - 981\text{ N}(1.5\text{ m}) - 200\text{ N}\cdot\text{m} + T_C(3\text{ m}) = 0 \qquad (5)$

Solving Eqs. 1 through 3 or the more convenient Eqs. 1, 4, and 5 yields

$A_z = 790\text{ N} \qquad B_z = -217\text{ N} \qquad T_C = 707\text{ N}$ *Ans.*

The negative sign indicates that $\mathbf{B}_z$ acts downward.

NOTE: The solution of this problem does not require a summation of moments about the *z* axis. The plate is partially constrained since the supports cannot prevent it from turning about the *z* axis if a force is applied to it in the *x*–*y* plane.

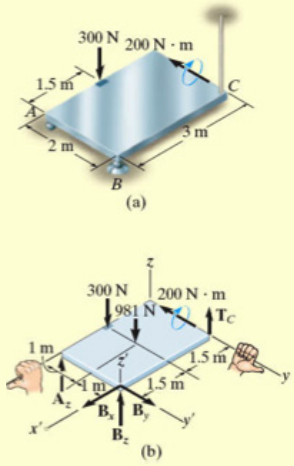

Fig. 5–28

example 5.16

Determine the components of reaction that the ball-and-socket joint at *A*, the smooth journal bearing at *B*, and the roller support at *C* exert on the rod assembly in Fig. 5–29*a*.

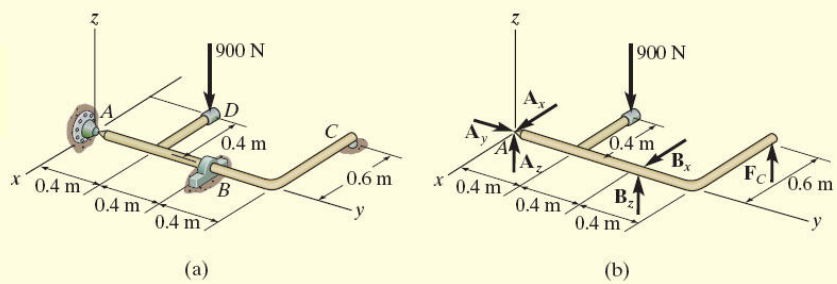

Fig. 5–29

SOLUTION

Free-Body Diagram. As shown on the free-body diagram, Fig. 5–29*b*, the reactive forces of the supports will prevent the assembly from rotating about each coordinate axis, and so the journal bearing at *B* only exerts reactive forces on the member.

example 5.16

Equations of Equilibrium. A direct solution for A_y can be obtained by summing forces along the y axis.

$\Sigma F_y = 0;\qquad A_y = 0$ *Ans.*

The force F_C can be determined directly by summing moments about the y axis.

$\Sigma M_y = 0;\qquad F_C(0.6\text{ m}) - 900\text{ N}(0.4\text{ m}) = 0$

$F_C = 600\text{ N}$ *Ans.*

Using this result, B_z can be determined by summing moments about the x axis.

$\Sigma M_x = 0;\qquad B_z(0.8\text{ m}) + 600\text{ N}(1.2\text{ m}) - 900\text{ N}(0.4\text{ m}) = 0$

$B_z = -450\text{ N}$ *Ans.*

The negative sign indicates that $\mathbf{B}_z$ acts downward. The force B_x can be found by summing moments about the z axis.

$\Sigma M_z = 0;\qquad -B_x(0.8\text{ m}) = 0\quad B_x = 0$ *Ans.*

Thus,

$\Sigma F_x = 0;\qquad A_x + 0 = 0\quad A_x = 0$ *Ans.*

Finally, using the results of B_z and F_C.

$\Sigma F_z = 0;\qquad A_z + (-450\text{ N}) + 600\text{ N} - 900\text{ N} = 0$

$A_z = 750\text{ N}$ *Ans.*

problem 02

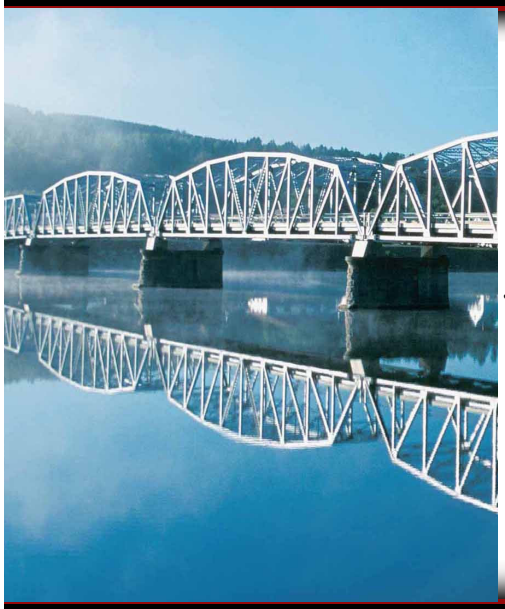

- to show how to determine the forces in the members of a truss using the methods of joints
- to analyze the forces acting on the members of frames and machines composed of pin-connected members

example 6.1

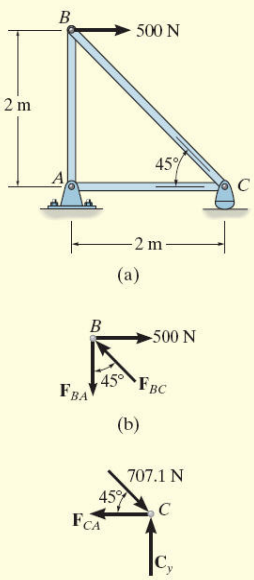

Determine the force in each member of the truss shown in Fig. 6–8*a* and indicate whether the members are in tension or compression.

SOLUTION

Since we should have no more than two unknown forces at the joint and at least one known force acting there, we will begin our analysis at joint B.

Joint B. The free-body diagram of the joint at B is shown in Fig. 6–8*b*. Applying the equations of equilibrium, we have

$\xrightarrow{+}\Sigma F_x = 0;\qquad 500\text{ N} - F_{BC}\sin 45° = 0\qquad F_{BC} = 707.1\text{ N (C)}$ *Ans.*

$+\uparrow\Sigma F_y = 0;\qquad F_{BC}\cos 45° - F_{BA} = 0\qquad F_{BA} = 500\text{ N (T)}$ *Ans.*

Since the force in member BC has been calculated, we can proceed to analyze joint C to determine the force in member CA and the support reaction at the rocker.

example 6.1

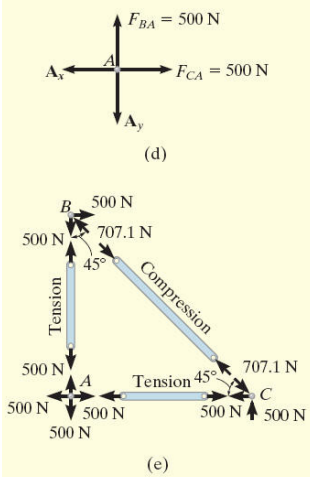

Fig. 6–8

Joint C. From the free-body diagram of joint C, Fig. 6–8*c*, we have

$\xrightarrow{+}\Sigma F_x = 0;\ -F_{CA} + 707.1\cos 45°\text{ N} = 0\qquad F_{CA} = 500\text{ N (T)}$ *Ans.*

$+\uparrow\Sigma F_y = 0;\qquad C_y - 707.1\sin 45°\text{ N} = 0\qquad C_y = 500\text{ N}$ *Ans.*

Joint A. Although it is not necessary, we can determine the components of the support reactions at joint A using the results of F_{CA} and F_{BA}. From the free-body diagram, Fig. 6–8*d*, we have

$\xrightarrow{+}\Sigma F_x = 0;\qquad 500\text{ N} - A_x = 0\quad A_x = 500\text{ N}$

$+\uparrow\Sigma F_y = 0;\qquad 500\text{ N} - A_y = 0\quad A_y = 500\text{ N}$

NOTE: The results of the analysis are summarized in Fig. 6–8*e*. Note that the free-body diagram of each joint (or pin) shows the effects of all the connected members and external forces applied to the joint, whereas the free-body diagram of each member shows only the effects of the end joints on the member.

problem 6.5

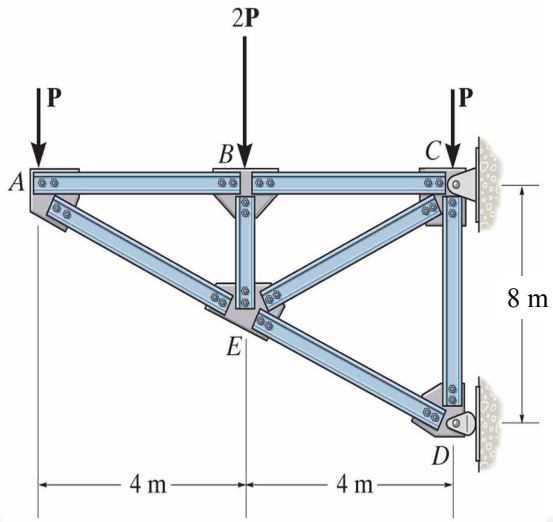

problem 03

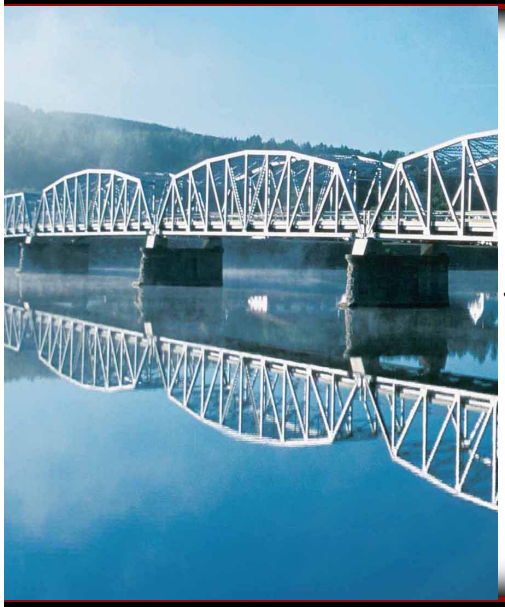

- to show how to determine the forces in the members of a truss using the methods of joints
- to analyze the forces acting on the members of frames and machines composed of pin-connected members

example 6.9

For the frame shown in Fig. 6–21*a*, draw the free-body diagram of (a) each member, (b) the pin at *B*, and (c) the two members connected together.

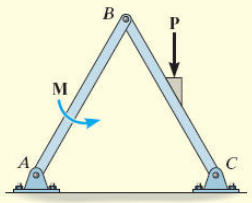

(a)

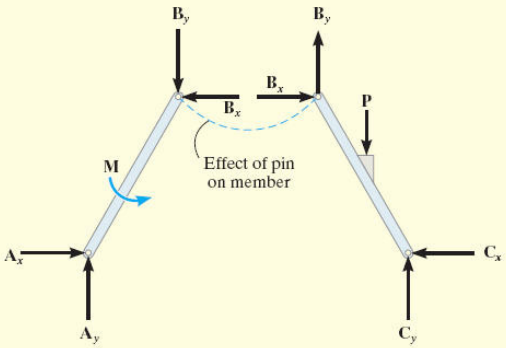

(b)

example 6.9

SOLUTION

Part (a). By inspection, members *BA* and *BC* are *not* two-force members. Instead, as shown on the free-body diagrams, Fig. 6–21*b*, *BC* is subjected to a force from the pins at *B* and *C* and the external force **P**. Likewise, *AB* is subjected to a force from the pins at *A* and *B* and the external couple moment **M**. The pin forces are represented by their *x* and *y* components.

Part (b). The pin at *B* is subjected to only *two forces*, i.e., the force of member *BC* and the force of member *AB*. For *equilibrium* these forces or their respective components must be equal but opposite, Fig. 6–21*c*. Realize that Newton's third law is applied between the pin and its connected members, i.e., the effect of the pin on the two members, Fig. 6–21*b*, and the equal but opposite effect of the two members on the pin, Fig. 6–21*c*.

Part (c). The free-body diagram of both members connected together, yet removed from the supporting pins at *A* and *C*, is shown in Fig. 6–21*d*. The force components $\mathbf{B}_x$ and $\mathbf{B}_y$ are *not shown* on this diagram since they are *internal* forces (Fig. 6–21*b*) and therefore cancel out. Also, to be consistent when later applying the equilibrium equations, the unknown force components at *A* and *C* must act in the *same sense* as those shown in Fig. 6–21*b*.

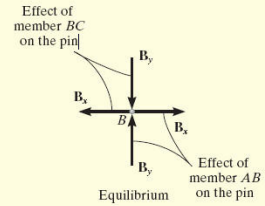

(c)

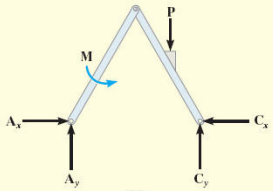

(d)

Fig. 6–21

example 6.9

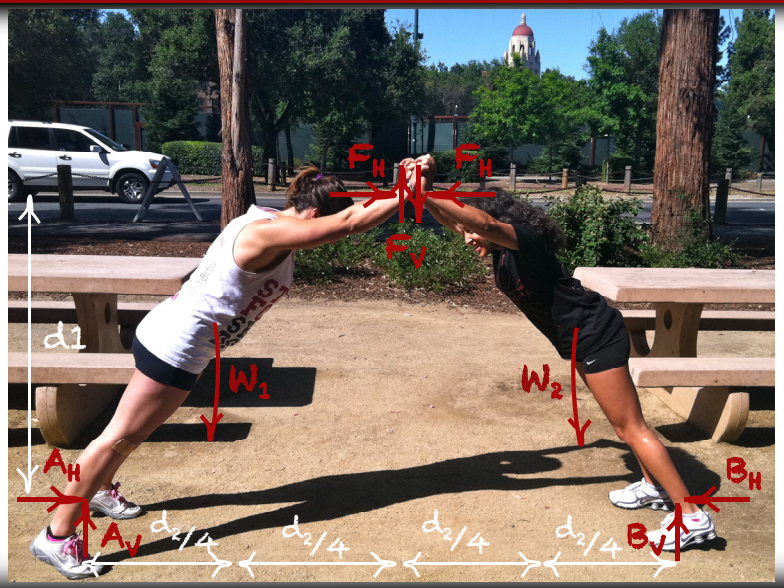

example 6.9

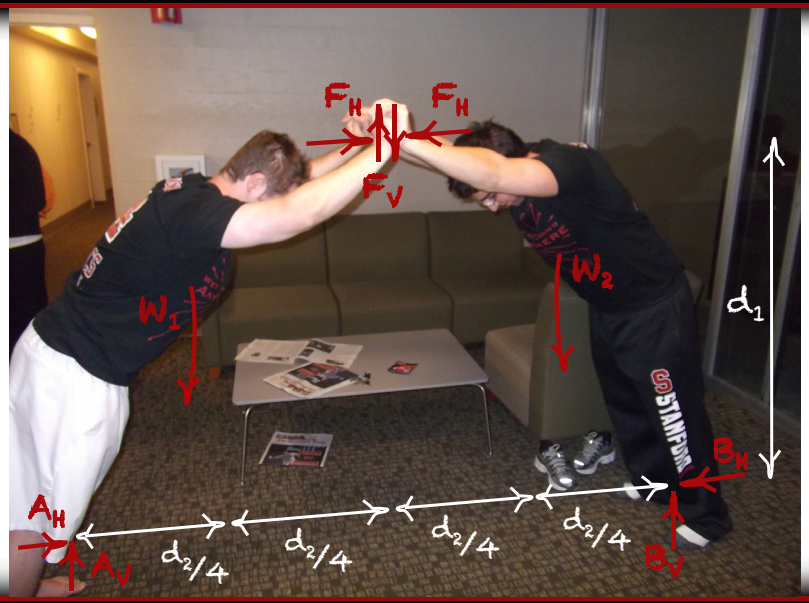

problem 6.74

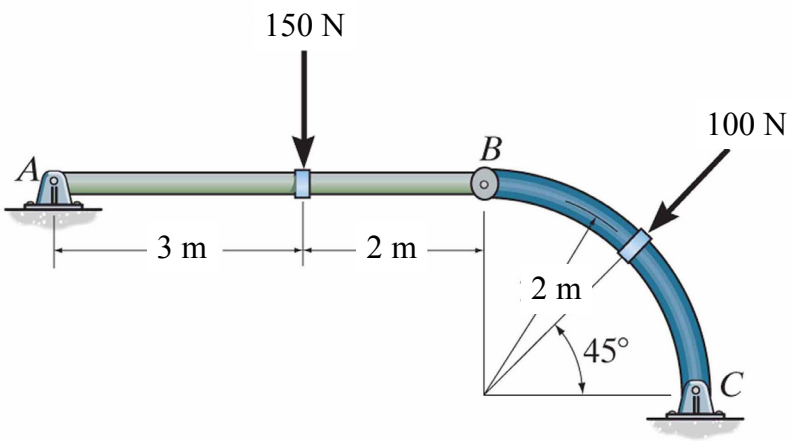

problem 04

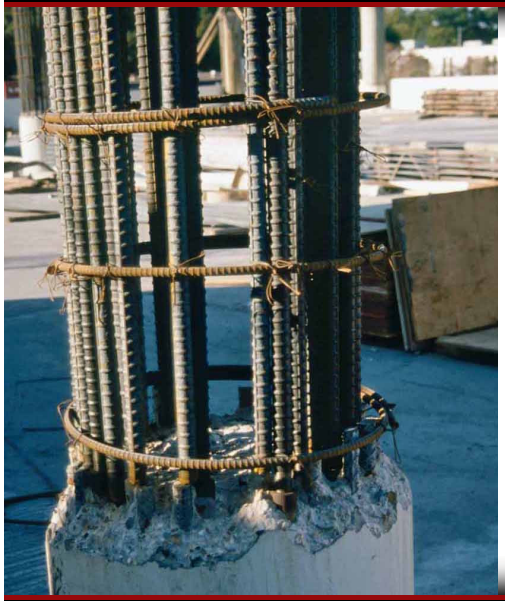

- to show how to use the method of sections to determine the internal loadings in a member
- to generalize this procedure by formulating equations that can be plotted so that they describe the internal shear and moment throughout a member

example - simply supported beam

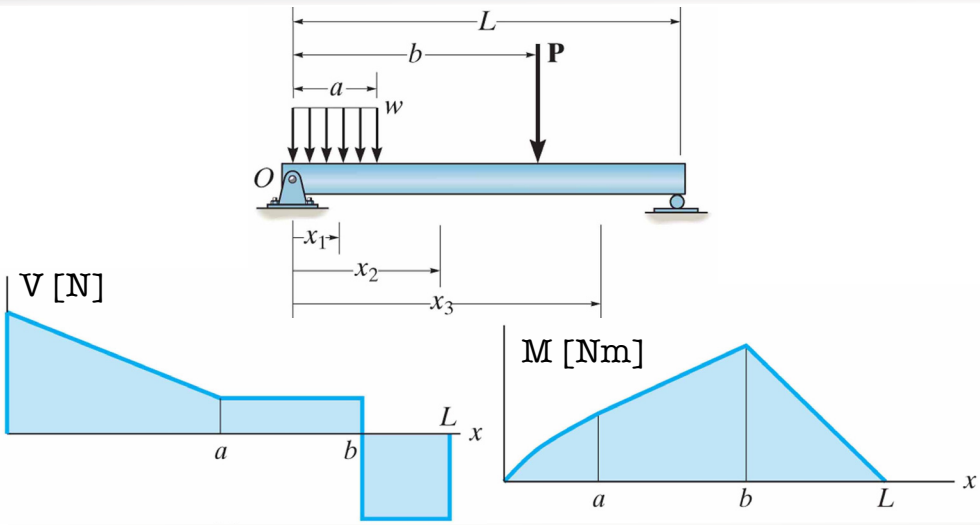

example 7.6

Draw the shear and moment diagrams for the shaft shown in Fig. 7–11*a*. The support at *A* is a thrust bearing and the support at *C* is a journal bearing.

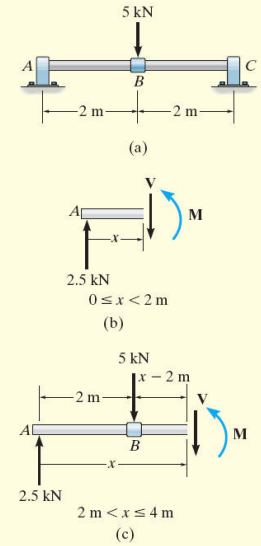

SOLUTION

Support Reactions. The support reactions are shown on the shaft's free-body diagram, Fig. 7–11*d*.

Shear and Moment Functions. The shaft is sectioned at an arbitrary distance x from point A, extending within the region AB, and the free-body diagram of the left segment is shown in Fig. 7–11*b*. The unknowns **V** and **M** are assumed to act in the *positive sense* on the right-hand face of the segment according to the established sign convention. Applying the equilibrium equations yields

$$+\uparrow \Sigma F_y = 0; \qquad V = 2.5 \text{ kN} \qquad (1)$$

$$\circlearrowleft + \Sigma M = 0; \qquad M = 2.5x \text{ kN} \cdot \text{m} \qquad (2)$$

A free-body diagram for a left segment of the shaft extending a distance x within the region BC is shown in Fig. 7–11*c*. As always, **V** and **M** are shown acting in the positive sense. Hence,

$$+\uparrow \Sigma F_y = 0; \qquad 2.5 \text{ kN} - 5 \text{ kN} - V = 0$$

$$V = -2.5 \text{ kN} \qquad (3)$$

$$\circlearrowleft + \Sigma M = 0; \qquad M + 5 \text{ kN}(x - 2 \text{ m}) - 2.5 \text{ kN}(x) = 0$$

$$M = (10 - 2.5x) \text{ kN} \cdot \text{m}$$

example 7.6

(4)

Shear and Moment Diagrams. When Eqs. 1 through 4 are plotted within the regions in which they are valid, the shear and moment diagrams shown in Fig. 7–11*d* are obtained. The shear diagram indicates that the internal shear force is always 2.5 kN (positive) within segment AB. Just to the right of point B, the shear force changes sign and remains at a constant value of -2.5 kN for segment BC. The moment diagram starts at zero, increases linearly to point B at $x = 2$ m, where $M_{max} = 2.5 \text{ kN}(2 \text{ m}) = 5 \text{ kN} \cdot \text{m}$, and thereafter decreases back to zero.

NOTE: It is seen in Fig. 7–11*d* that the graphs of the shear and moment diagrams are discontinuous where the concentrated force acts, i.e., at points A, B, and C. For this reason, as stated earlier, it is necessary to express both the shear and moment functions separately for regions between concentrated loads. It should be realized, however, that all loading discontinuities are mathematical, arising from the *idealization of a concentrated force and couple moment*. Physically, loads are always applied over a finite area, and if the actual load variation could be accounted for, the shear and moment diagrams would then be continuous over the shaft's entire length.

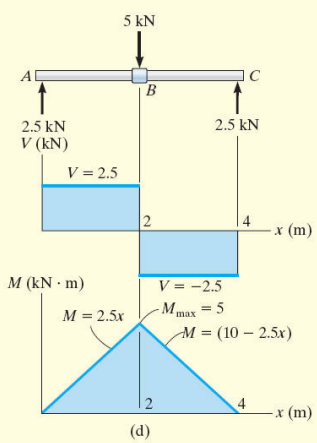

Fig. 7–11

statics of the hanging problem

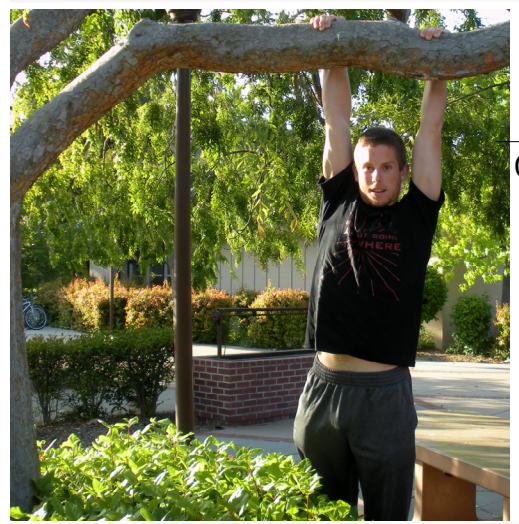

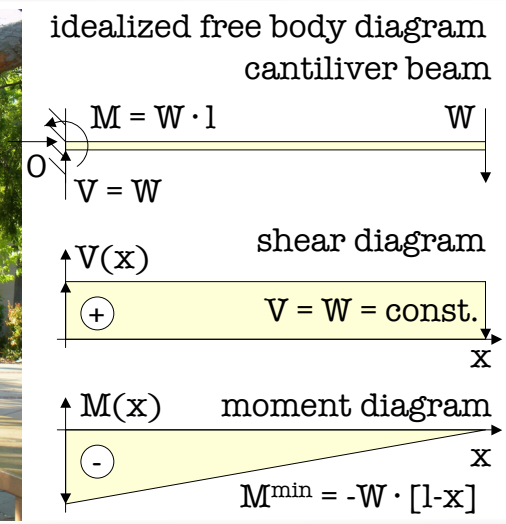

examples

examples

examples

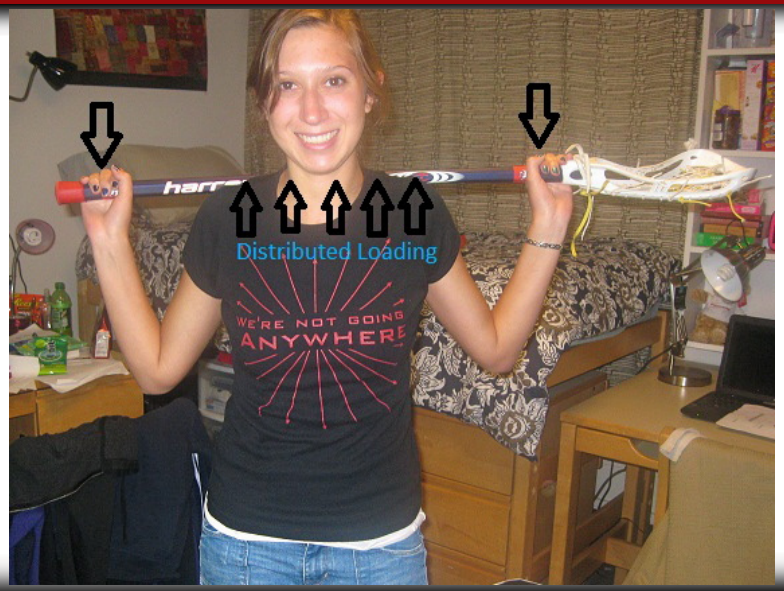

examples

problem 7.78

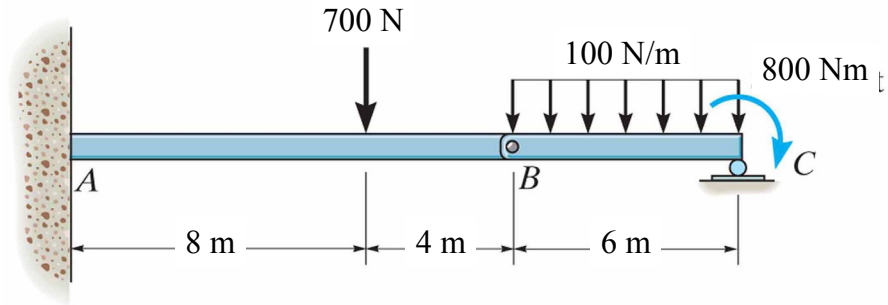

problem 05

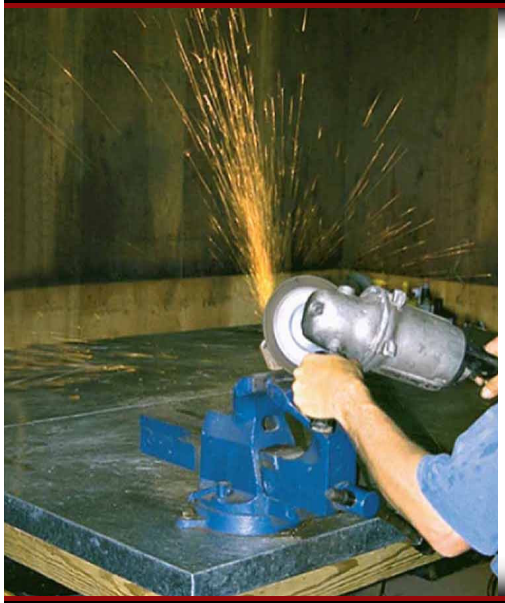

- the heat generated by the abrasive action of friction can be noticed when using this drinder to sharpen a metal blade
- friction is a force that risists the movement of two contacting surfaces relative to one another
- friction always acts **tangent to the surface** and is directed **opposite to a possible motion**

slipping & tipping

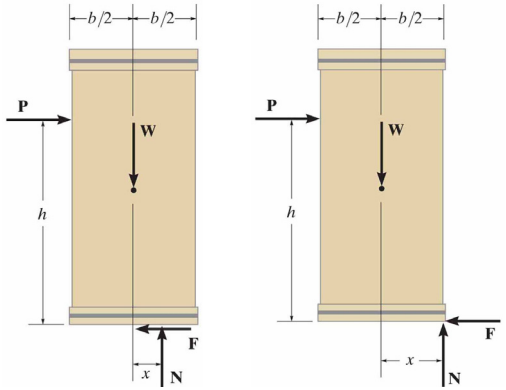

pushing on the uniform crate of weight W sitting on a rough surface. if the magnitude P is small, the crate will remain in equilibrium and not move (left FBD). as P increases, the crate will either be on the verge of slipping, $F = \mu_s \cdot M$, or, if the surface is very rough with large μ_s, the resultant force moves towards the corner and beyond, x>b/2, and the crate will tip over. tipping also depends on the height h of the force P.

example 8.1

The uniform crate shown in Fig. 8–7*a* has a mass of 20 kg. If a force $P = 80$ N is applied to the crate, determine if it remains in equilibrium. The coefficient of static friction is $\mu_s = 0.3$.

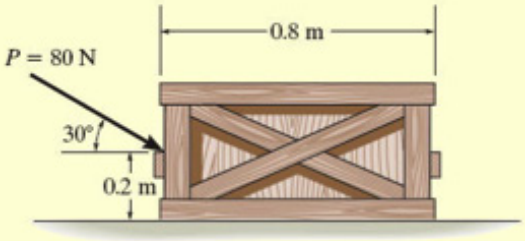

example 8.1

SOLUTION

Free-Body Diagram. As shown in Fig. 8–7*b*, the *resultant* normal force $\mathbf{N}_C$ must act a distance x from the crate's center line in order to counteract the tipping effect caused by $\mathbf{P}$. There are *three unknowns*, F, N_C, and x, which can be determined strictly from the *three* equations of equilibrium.

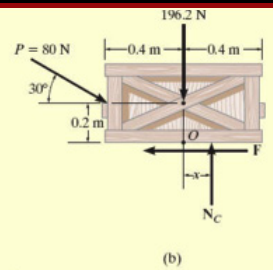

Equations of Equilibrium.

$$\xrightarrow{+} \Sigma F_x = 0; \qquad 80\cos 30^\circ \text{ N} - F = 0$$

$$+\uparrow \Sigma F_y = 0; \qquad -80\sin 30^\circ \text{ N} + N_C - 196.2 \text{ N} = 0$$

$$\circlearrowleft + \Sigma M_O = 0; \qquad 80\sin 30^\circ \text{ N}(0.4 \text{ m}) - 80\cos 30^\circ \text{ N}(0.2 \text{ m}) + N_C(x) = 0$$

Solving,

$$F = 69.3 \text{ N}$$

$$N_C = 236 \text{ N}$$

$$x = -0.00908 \text{ m} = -9.08 \text{ mm}$$

Since x is negative it indicates the *resultant* normal force acts (slightly) to the *left* of the crate's center line. No tipping will occur since $x < 0.4$ m. Also, the *maximum* frictional force which can be developed at the surface of contact is $F_{max} = \mu_s N_C = 0.3(236 \text{ N}) = 70.8$ N. Since $F = 69.3 \text{ N} < 70.8$ N, the crate will *not slip*, although it is very close to doing so.

example 8.3

The uniform 10-kg ladder in Fig. 8–9*a* rests against the smooth wall at B, and the end A rests on the rough horizontal plane for which the coefficient of static friction is $\mu_s = 0.3$. Determine the angle of inclination θ of the ladder and the normal reaction at B if the ladder is on the verge of slipping.

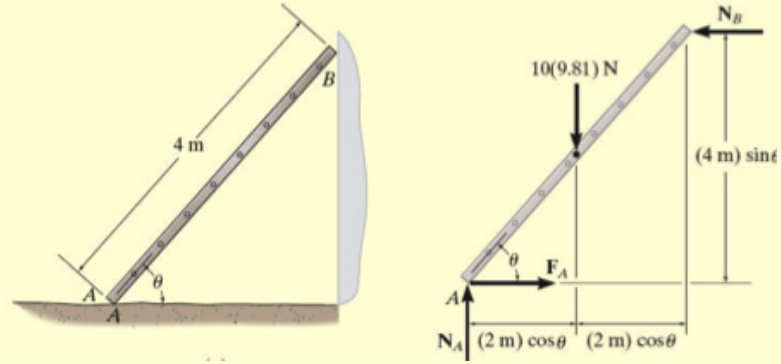

example 8.3

Free-Body Diagram. As shown on the free-body diagram, Fig. 8–9*b*, the frictional force $\mathbf{F}_A$ must act to the right since impending motion at A is to the left.

Equations of Equilibrium and Friction. Since the ladder is on the verge of slipping, then $F_A = \mu_s N_A = 0.3N_A$. By inspection, N_A can be obtained directly.

$$+\uparrow \Sigma F_y = 0; \qquad N_A - 10(9.81) \text{ N} = 0 \qquad N_A = 98.1 \text{ N}$$

Using this result, $F_A = 0.3(98.1 \text{ N}) = 29.43$ N. Now N_B can be found.

$$\xrightarrow{+} \Sigma F_x = 0; \qquad 29.43 \text{ N} - N_B = 0$$

$$N_B = 29.43 \text{ N} = 29.4 \text{ N} \qquad \textit{Ans.}$$

Finally, the angle θ can be determined by summing moments about point A.

$$\circlearrowleft + \Sigma M_A = 0; \qquad (29.43 \text{ N})(4 \text{ m})\sin\theta - [10(9.81) \text{ N}](2 \text{ m})\cos\theta = 0$$

$$\frac{\sin\theta}{\cos\theta} = \tan\theta = 1.6667$$

$$\theta = 59.04^\circ = 59.0^\circ \qquad \textit{Ans.}$$

examples

examples

examples

examples

problem 06

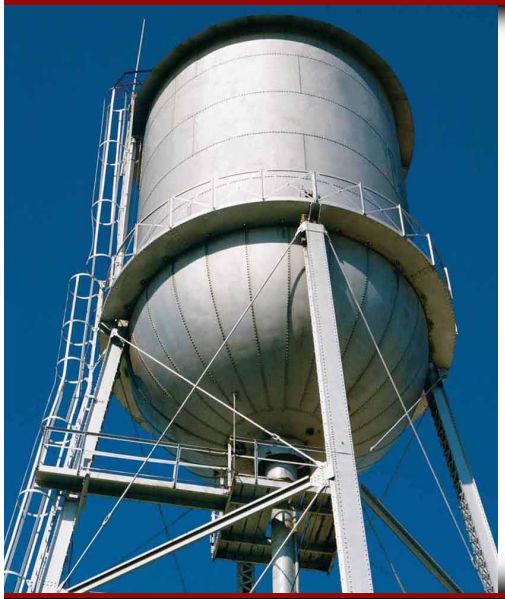

- to discuss the concept of the center of gravity, center of mass, and centroid
- to show how to determine the center of gravity and centroid for a **system of particles**
- to show how to determine the center of gravity and centroid for **composite bodies**

example 9.10

Locate the centroid of the plate area shown in Fig. 9–17*a*.

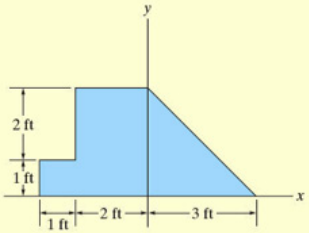

(a)

Fig. 9–17

SOLUTION

Composite Parts. The plate is divided into three segments as shown in Fig. 9–17*b*. Here the area of the small rectangle ③ is considered "negative" since it must be subtracted from the larger one ②.

Moment Arms. The centroid of each segment is located as indicated in the figure. Note that the $\tilde{x}$ coordinates of ② and ③ are *negative*.

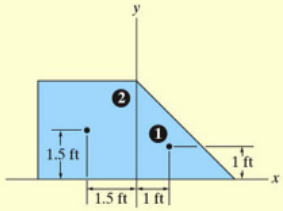

example 9.10

Summations. Taking the data from Fig. 9–17*b*, the calculations are tabulated as follows:

Segment	A (ft^2)	$\tilde{x}$ (ft)	$\tilde{y}$ (ft)	$\tilde{x}A$ (ft^3)	$\tilde{y}A$ (ft^3)
1	$\frac{1}{2}(3)(3) = 4.5$	1	1	4.5	4.5
2	$(3)(3) = 9$	−1.5	1.5	−13.5	13.5
3	$-(2)(1) = -2$	−2.5	2	5	−4
	$\Sigma A = 11.5$			$\Sigma\tilde{x}A = -4$	$\Sigma\tilde{y}A = 14$

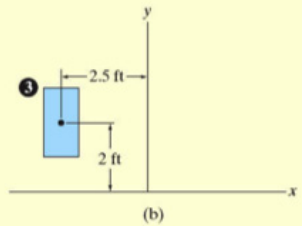

(b)

Thus,

$$\bar{x} = \frac{\Sigma\tilde{x}A}{\Sigma A} = \frac{-4}{11.5} = -0.348 \text{ ft} \qquad \textit{Ans.}$$

$$\bar{y} = \frac{\Sigma\tilde{y}A}{\Sigma A} = \frac{14}{11.5} = 1.22 \text{ ft} \qquad \textit{Ans.}$$

NOTE: If these results are plotted in Fig. 9–17, the location of point *C* seems reasonable.

mr equilibrium: isaac newton

e14 - applied mechanics: statics

- **regular final**
  mon, 06/06/11, 8:30-10:30am, 120 min, cubaud
- regular final (w/extra time and extra room)
  mon, 06/05/11, 8:30-11:30pm, durand 203, 180 min
- **makeup final**
  sun, 05/05/11, 3:00-5:00pm, 530-127, 120 min
- makeup final (w/extra time)
  sun, 05/05/11, 3:00-6:00pm, 530-127, 180 min
- closed book, closed notes, one page **cheat sheet**
- bring your **calculators!**
- **last minute office hours**
  sun, 05/05/11, 3:00-6:00, @ (but not in) 530-127