e14 - applied mechanics: statics

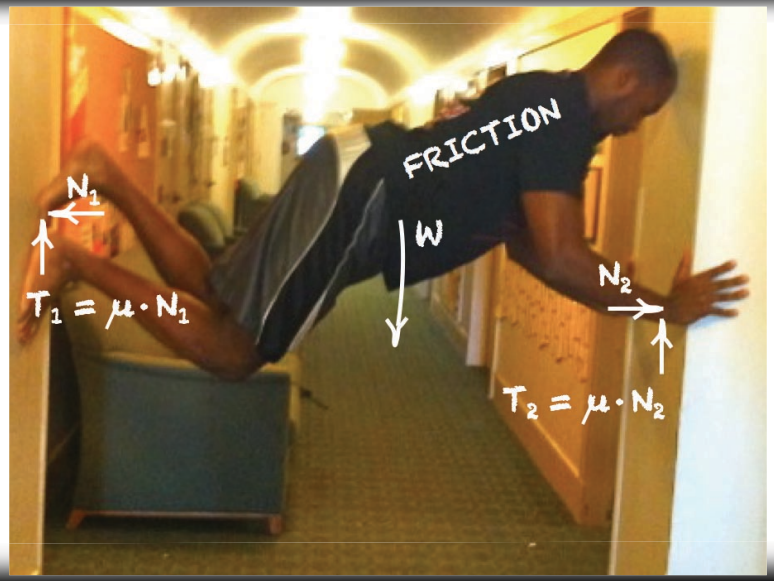

mon/wed/fri, 12:50-2:05pm, 370-370

e14 - applied mechanics: statics

	w06		3d equilibrium week	ch 5
mon	may	02	what's a free body diagram of a 3d system?	5.5
wed	may	04	what force and moment equilibrium in 3d?	5.6-5.7
fri	may	06	problem session 4	
	w07		structures week	ch 6
mon	may	09	what's truss structure?	6.1-6.3
wed	may	11	what's a frame?	6.6
fri	may	13	problem session 5	
	w08		internal force week	ch 7
mon	may	16	what's inside?	7.1
wed	may	18	midterm 2, in class, closed book, 1 cheat sheet	cubberley
fri	may	20	what's a shear and moment diagram?	7.2-7.3
	w09		friction and center week	ch 8-9
mon	may	23	what's friction?	8.1-8.2
wed	may	25	what's the center?	9.1-9.2
fri	may	27	problem session 6	
	w10		that's it week	
mon	may	30	memorial day / no class	
wed	jun	01	what's a was this all about?	
fri	jun	03	end of quarter / no class	
sat	jun	04	problems, problems, problems ...	
mon	jun	06	final, in class, closed book, 1 cheat sheet	

fifth homework due

syllabus

e14 - applied mechanics: statics

Homework V - Chapters 7 and 8

due Friday, 05/27/11, 12:50pm, 370-370

For late homework, you are responsible to arrange drop off with our grader Kaushik Mani, kmani@stanford.edu. Once you have used up your three late days, you will no longer receive points for your homework. Here are our office hours and emails.

when	when	where	who	email
Tuesdays	06:00 - 07:30pm	Durand 247	Charbel	ceid@stanford.edu
Wednesdays	02:30 - 04:00pm	Durand 217	Ellen	ekuhl@stanford.edu
Wednesdays	05:00 - 06:30pm	Durand 393	Chris	cploch@stanford.edu
Thursdays	10:00 - 11:30am	Durand 203	Joules	jmgould@stanford.edu
Thursdays	01:00 - 02:30pm	Durand 393	Estevan	estevanm@stanford.edu

For this homework, you need to be familiar with chapters 7 and 8 of your book!
Remember, all solutions must include free body diagrams!

homework #05

e14 - applied mechanics: statics

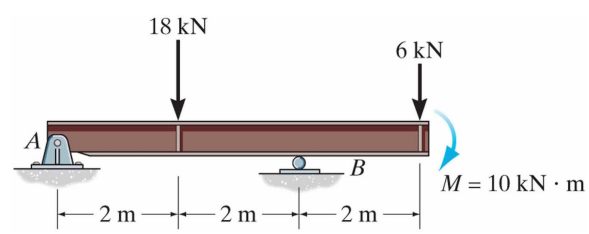

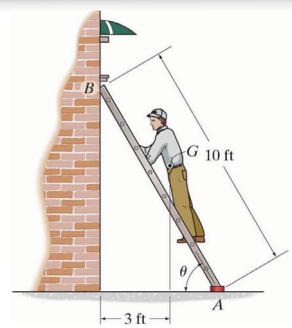

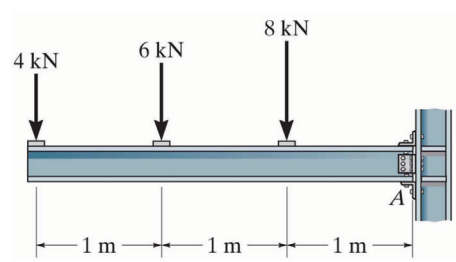

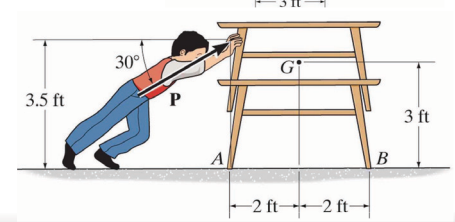

homework #05

e14 - applied mechanics: statics

Wear your E14 T-shirt and take a landscape format photo of yourself in a funny situation. The photo must contain either **a shear and moment diagram situation** (chapter 7) or **a friction problem** (chapter 8). Upload your photo through your coursework drop box. The five most creative photos will receive **five extra bonus points**.

homework #05

making the internal extrenal

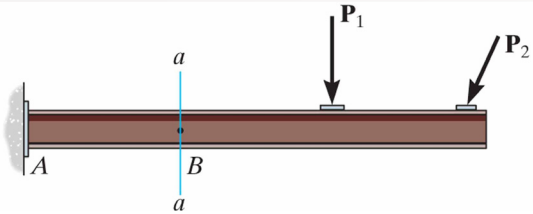

internal loading > imaginary section > external loading

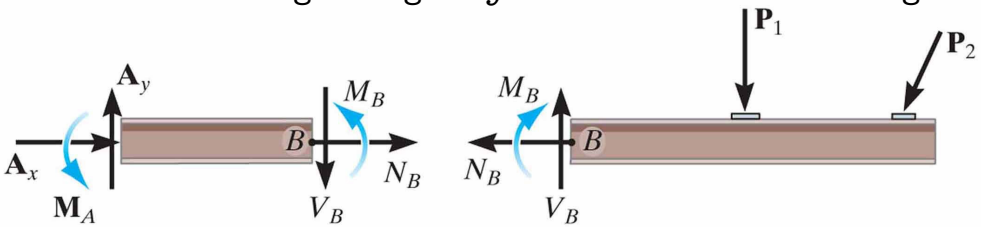

normal force N, shear force V, bending moment M

7.1 internal forces in beams

example - simply supported beam

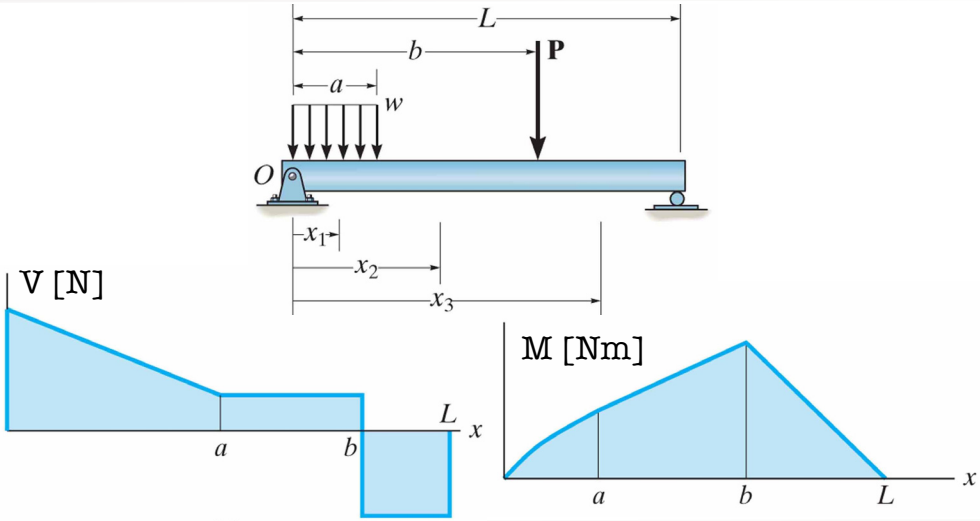

7.2 shear and moment diagrams

statics of the hanging problem

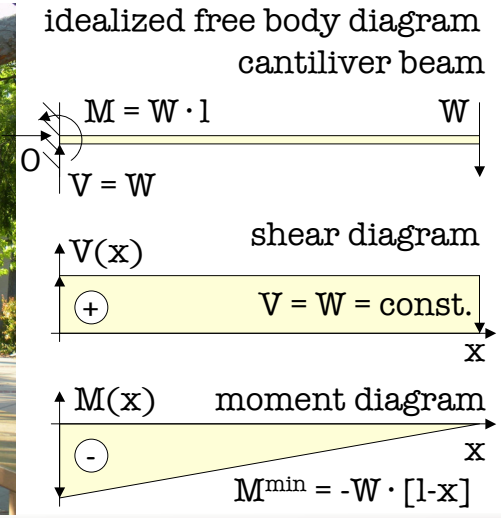

7.2 shear and moment diagrams

today's objectives

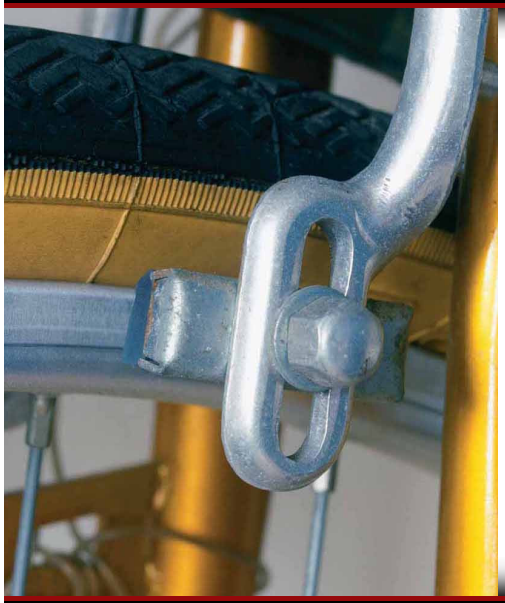

- to introduce the concept of dry friction
- to analyze the equilibrium equation of rigid bodies subject to friction
- to present specific applications friction
- to investigate the concept of rolling resistance

from friction to heat

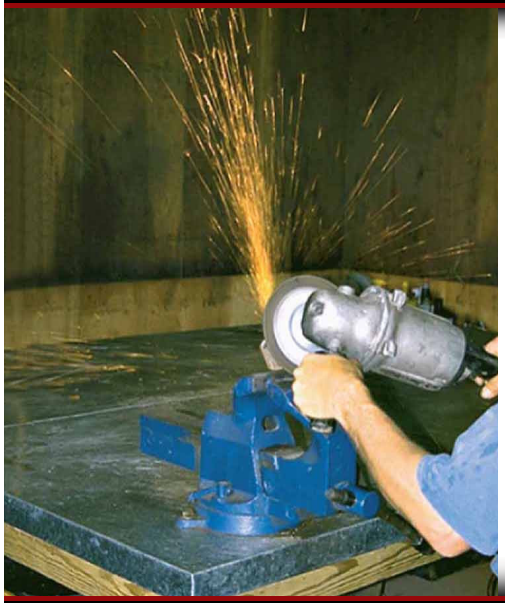

- the heat generated by the abrasive action of friction can be noticed when using this drinder to sharpen a metal blade
- friction is a force that risists the movement of two contacting surfaces relative to one another
- friction always acts **tangent to the surface** and is directed **opposite to a possible motion**

theory of dry friction

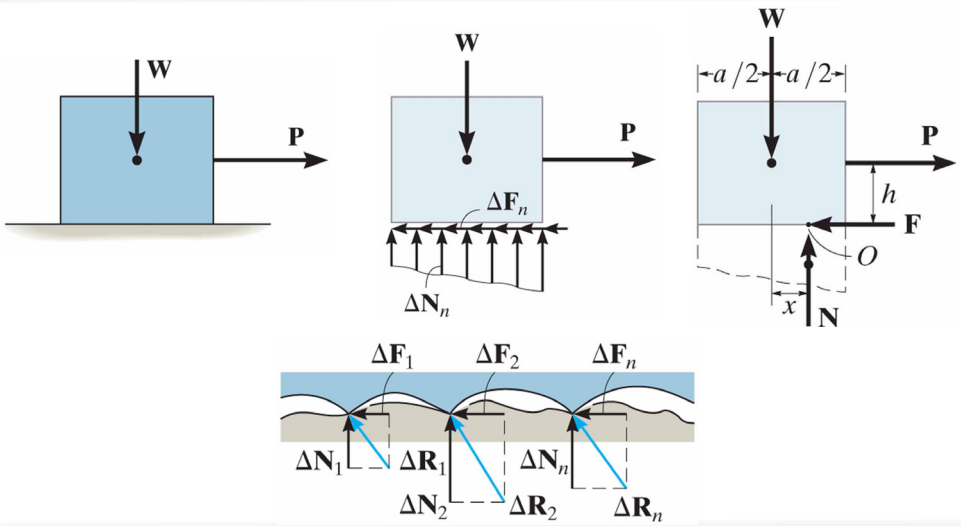

slipping & tipping

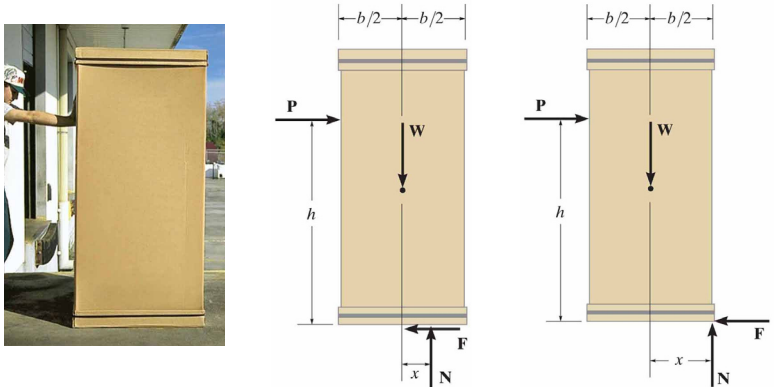

pushing on the uniform crate of weight W sitting on a rough surface. if the magnitude P is small, the crate will remain in equilibrium and not move (left FBD). as P increases, the crate will either be on the verge of slipping, $F = \mu_s \cdot M$, or, if the surface is very rough with large μ_s, the resultant force moves towards the corner and beyond, x>b/2, and the crate will tip over. tipping also depends on the height h of the force P.

example 8.1

The uniform crate shown in Fig. 8–7*a* has a mass of 20 kg. If a force $P = 80$ N is applied to the crate, determine if it remains in equilibrium. The coefficient of static friction is $\mu_s = 0.3$.

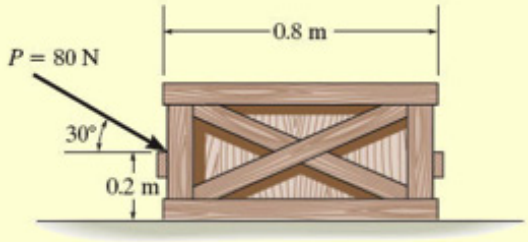

example 8.1

SOLUTION

Free-Body Diagram. As shown in Fig. 8–7*b*, the *resultant* normal force $\mathbf{N}_C$ must act a distance x from the crate's center line in order to counteract the tipping effect caused by $\mathbf{P}$. There are *three unknowns*, F, N_C, and x, which can be determined strictly from the *three* equations of equilibrium.

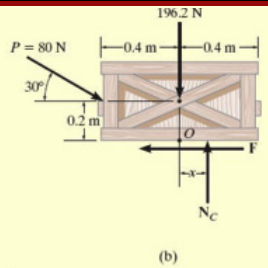

Equations of Equilibrium.

$\xrightarrow{+} \Sigma F_x = 0; \qquad 80 \cos 30^\circ \text{ N} - F = 0$

$+\uparrow \Sigma F_y = 0; \qquad -80 \sin 30^\circ \text{ N} + N_C - 196.2 \text{ N} = 0$

$\circlearrowleft + \Sigma M_O = 0; \qquad 80 \sin 30^\circ \text{ N}(0.4 \text{ m}) - 80 \cos 30^\circ \text{ N}(0.2 \text{ m}) + N_C(x) = 0$

Solving,

$$F = 69.3 \text{ N}$$
$$N_C = 236 \text{ N}$$
$$x = -0.00908 \text{ m} = -9.08 \text{ mm}$$

Since x is negative it indicates the *resultant* normal force acts (slightly) to the *left* of the crate's center line. No tipping will occur since $x < 0.4$ m. Also, the *maximum* frictional force which can be developed at the surface of contact is $F_{max} = \mu_s N_C = 0.3(236 \text{ N}) = 70.8$ N. Since $F = 69.3 \text{ N} < 70.8$ N, the crate will *not slip*, although it is very close to doing so.

example 8.3

The uniform 10-kg ladder in Fig. 8–9*a* rests against the smooth wall at B, and the end A rests on the rough horizontal plane for which the coefficient of static friction is $\mu_s = 0.3$. Determine the angle of inclination θ of the ladder and the normal reaction at B if the ladder is on the verge of slipping.

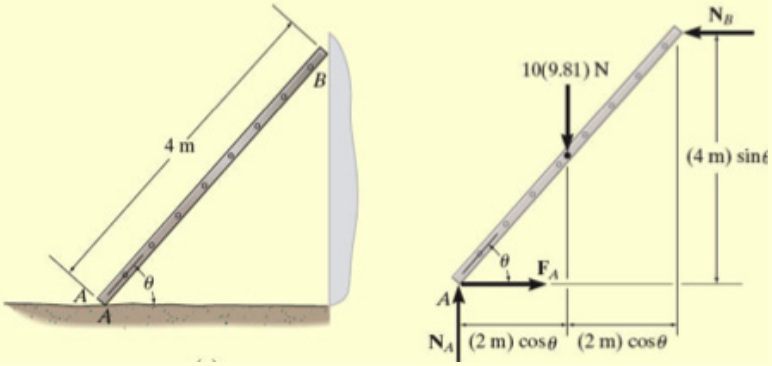

example 8.3

Free-Body Diagram. As shown on the free-body diagram, Fig. 8–9*b*, the frictional force $\mathbf{F}_A$ must act to the right since impending motion at A is to the left.

Equations of Equilibrium and Friction. Since the ladder is on the verge of slipping, then $F_A = \mu_s N_A = 0.3 N_A$. By inspection, N_A can be obtained directly.

$+\uparrow \Sigma F_y = 0; \qquad N_A - 10(9.81) \text{ N} = 0 \qquad N_A = 98.1 \text{ N}$

Using this result, $F_A = 0.3(98.1 \text{ N}) = 29.43$ N. Now N_B can be found.

$\xrightarrow{+} \Sigma F_x = 0; \qquad 29.43 \text{ N} - N_B = 0$

$N_B = 29.43 \text{ N} = 29.4 \text{ N}$ *Ans.*

Finally, the angle θ can be determined by summing moments about point A.

$\circlearrowleft + \Sigma M_A = 0; \qquad (29.43 \text{ N})(4 \text{ m}) \sin\theta - [10(9.81) \text{ N}](2 \text{ m}) \cos\theta = 0$

$$\frac{\sin\theta}{\cos\theta} = \tan\theta = 1.6667$$

$\theta = 59.04^\circ = 59.0^\circ$ *Ans.*